NOTE
PRIMARY PART # RM/8-471C (4)
REF DES R2, R8, R14, R15
RM/8-271C (2) REF DES R4, R10
SECONDARY PART # RM/4-471C (4)
RM/4-271C (2)
PER ECO 2997

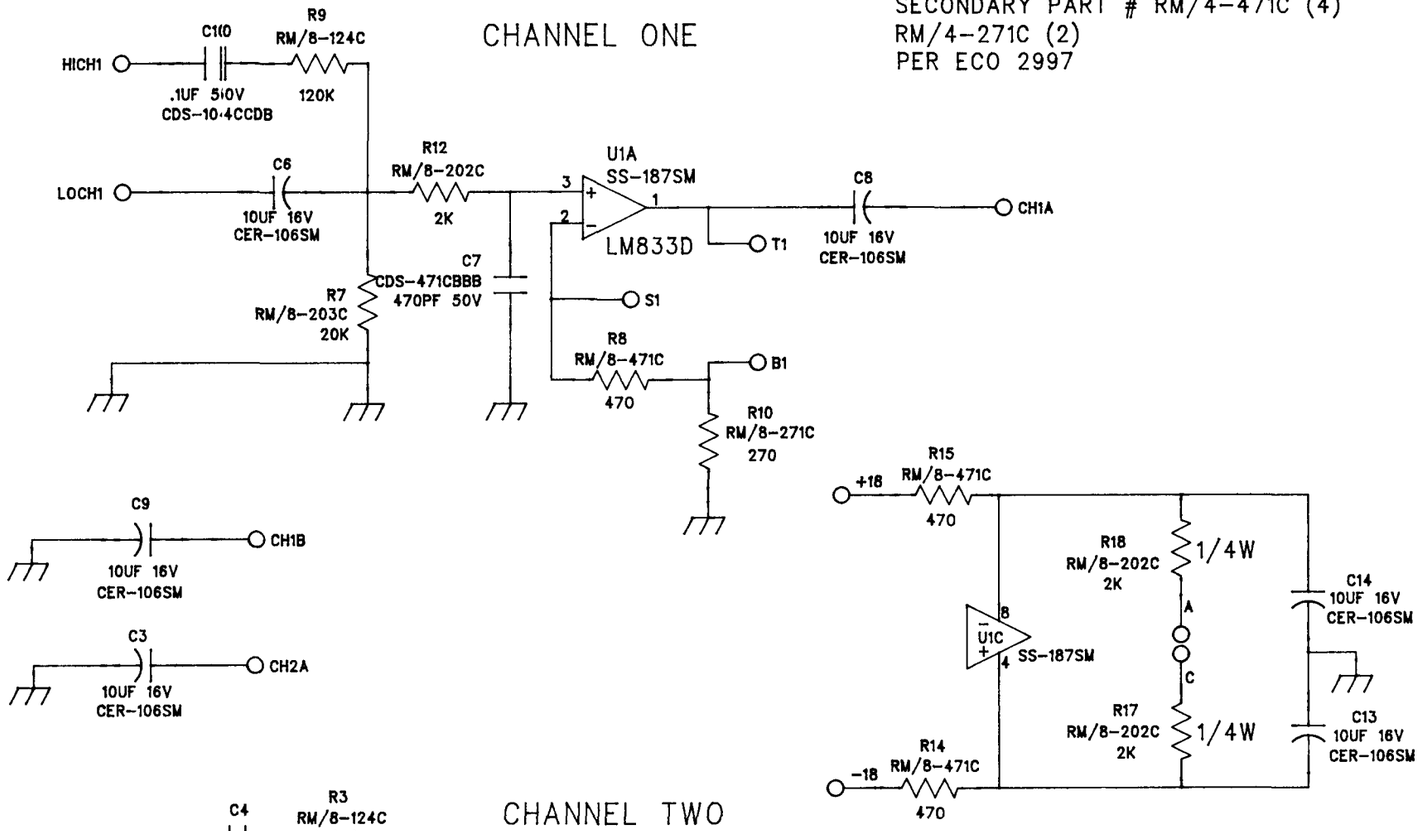

NOTES:

1. ALL RIESISTORS ARE 1/4W 5% SMD 1206 UNLESS SPECIFIED OTHERWISE

ECO 3065
PENDING

CORD	REV	REVISION RECORD	AUTHORITY	DATE	
	A	RELEASED	S.C.	7-91	
	B	ECO 2274	W.C.	1-92	
	C	ECO 2408	W.C.	1-92	
	D	ECO 2570	W.C.	3-92	
	E	ECO 2630	W.C.	3-92	
	F	ECO 2632	W.C.	3-92	
	G	ECO 2704	W.C.	9-92	
	H	ECO 2975	W.C.	12-92	
	I	ECO 2997	WC	1-93	

DWN	CLIFFORD	5/91	ROCKFORD CORPORATION FOSGATE DIVISION TEMPE AZ		
CHK		1-93			
ENGR	CLIFFORD	5/91	TITLE SCHEMATIC SERIES ONIE INPUT CIRCUIT FOR WP-PCS11C		
APVD		1-93			
APVD		1-93	SIZE B	SCALE	SHEET 1 OF 1
MATL/FS			FILE NAME PCS111	PART NO. SCH-S11	REV I